Optimum Bifurcating-Tube Tree for Gas Transport

Tianshu Liu

Department of Mechanical and Aerospace Engineering
Western Michigan University
Kalamazoo, MI 49008

Bronchial Tree as an Engineering Tree Model

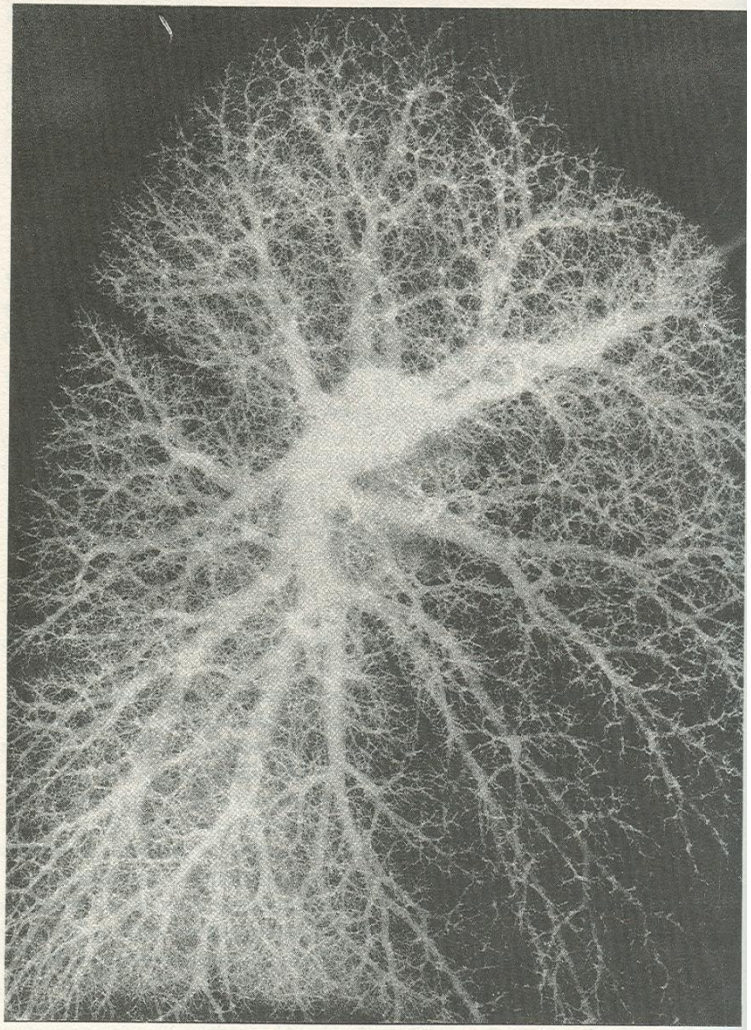

Figure 6 Self-similar bronchial tree [Com 66].

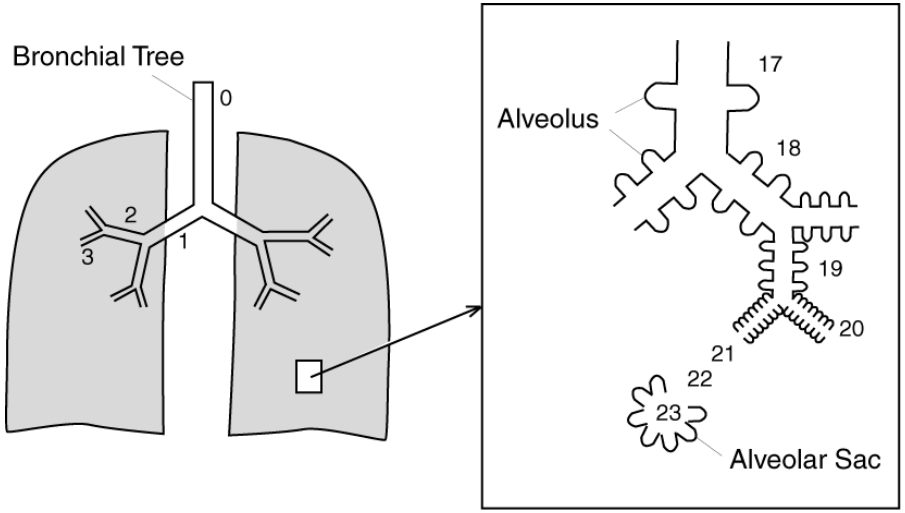

Bifurcating Tube Tree Geometry

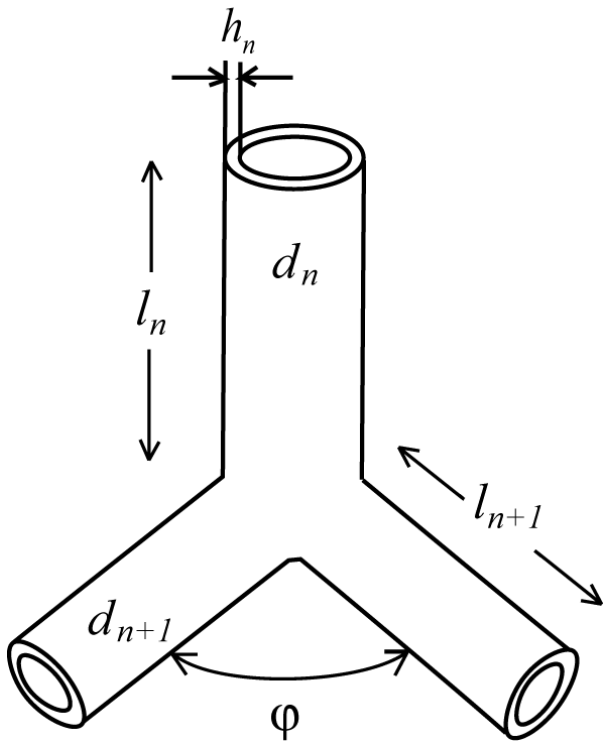

Objective:

To determine the distributions of the geometrical quantities as a function of the generation number

Murray's Law

Minimum Power Principle (Murray, CD 1926):

$$\boxed{d_n \propto 2^{-n/3}}$$

Minimum Resistance (Rashevsky, N 1960)
Minimum Entropy (Wilsion, TA 1967)
Minimum Volume (LaBarbera, M 1990)

Measurements of Diameter and Length

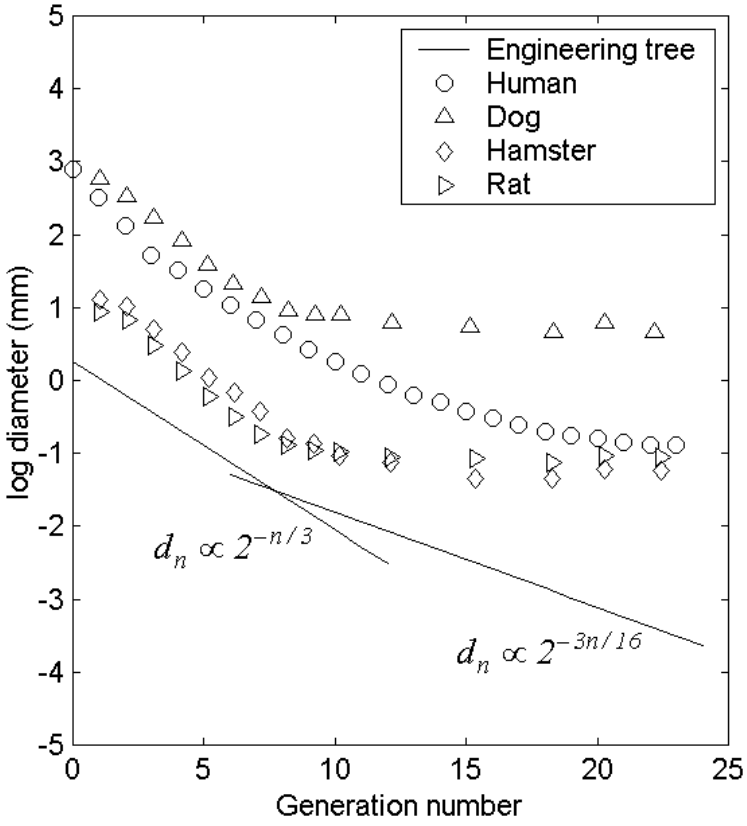

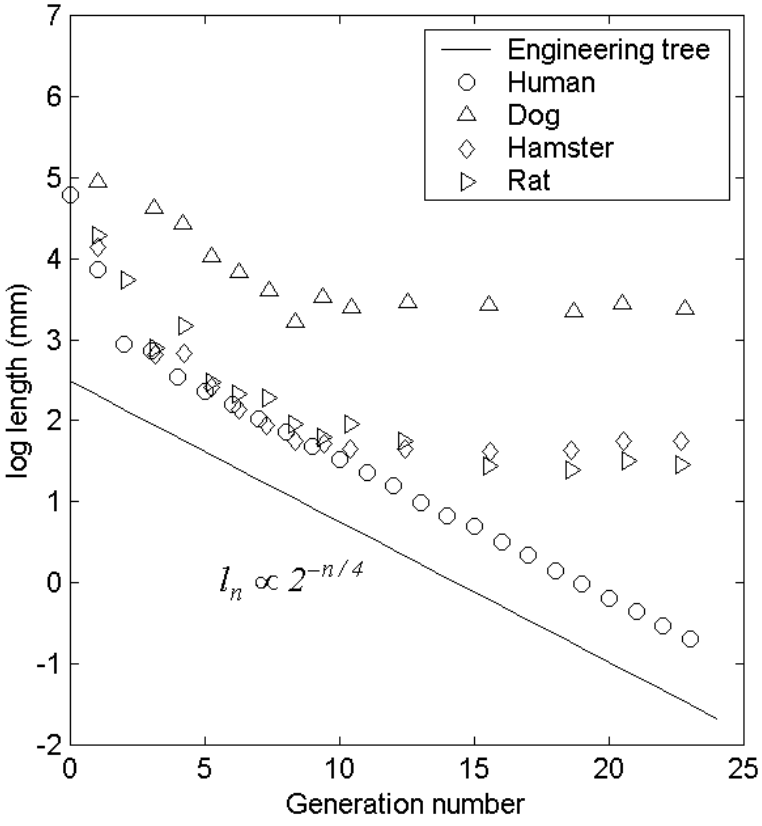

Underlying Physical Mechanisms

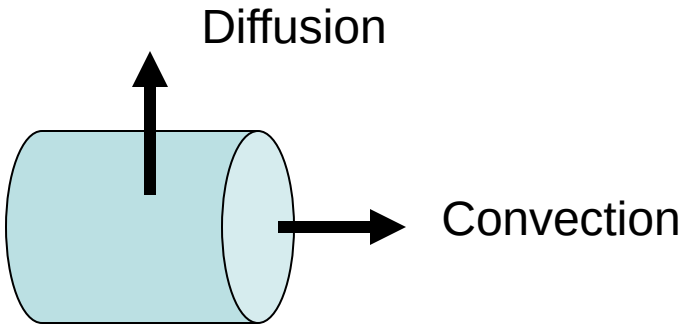

(1) <u>Convection Zone</u>

Minimum Power, Resistance and Entropy

(2) <u>Diffusion Zone</u>

Maximum Total Mass Diffusion Rate ?

Max-Min Problem

<u>*Cost Function:*</u> $$P = \sum_{n=1}^{N} w_n \, x_n$$

<u>*Constraint:*</u> $$\sum_{n=1}^{N} x_n^{\,s} = B$$

<u>*Solution:*</u> $$(x_n)_{op} = B^{1/s} \, w_n^{\,1/(s-1)} \left(\sum_{n=1}^{N} w_n^{\,s/(s-1)} \right)^{-1/s}$$

$$n = 1, 2, \ldots, N$$

For s > 1, Maximum of P;

For s < 1, Minimum of P.

Diameter Distribution and Maximum Gas Diffusion Rate

Diffusion Mass-Transfer Rate:

$$\dot{m}_n = D_{diff} (A_{eff})_n \Delta C_n / h_n$$

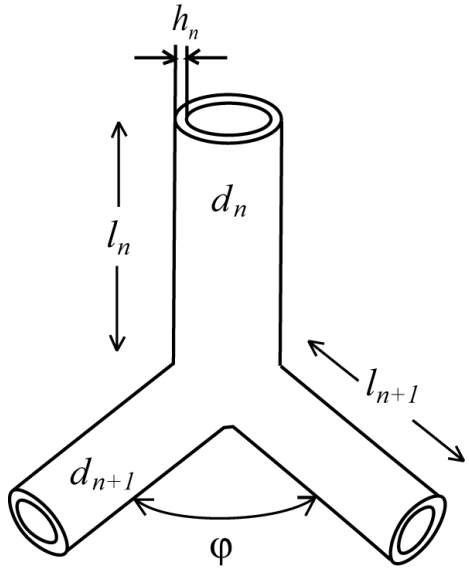

$(A_{eff})_n$ *Effective diffusion area*

ΔC_n *Change of gas concentration Across the wall*

Relation between Mass Transfer Rate and Volume

The geometrical relations:

$$(A_{eff})_n \propto V_n^{\alpha D_2/3}$$

$$h_n \propto 2^{-3n/8} V_n^{1/2}$$

The cascade of mass transfer: $C_n \propto V_n^{-\gamma} \quad (n > N/2)$

Diffusion mass-transfer rate:

$$\dot{m}_n = B_1 \, 2^{3n/8} \, V_n^{1/s}$$

The parameter: $s = (\alpha D_2/3 - \gamma - 1/2)^{-1}$

Maximizing Total Diffusion Mass-Transfer Rate:

$$\dot{m}_T = \sum \dot{m}_n = \sum w_n \, x_n$$

Constant Total Volume Constraint:

$$\sum V_n = \sum x_n^{\,s} = B_2$$

where the parameters are

$$x_n = V_n^{\,1/s} \qquad w_n = B_1 2^{3n/8}$$

At the optimal condition,

$$(V_n)_{op}^{1/s} = B_2^{1/s} w_n^{1/(s-1)} \left(\sum w_n^{s/(s-1)} \right)^{-1/s}$$

Consistence condition requires

$$s \to +\infty$$

$$\Downarrow$$

$$(V_n)_{op} \propto 2^{3n/8}$$

Diameter Distribution in Diffusion Zone

New law
for the diffusion zone:

$$d_n \propto 2^{-3n/16}$$

Murray's law
for the convection zone:

$$d_n \propto 2^{-n/3}$$

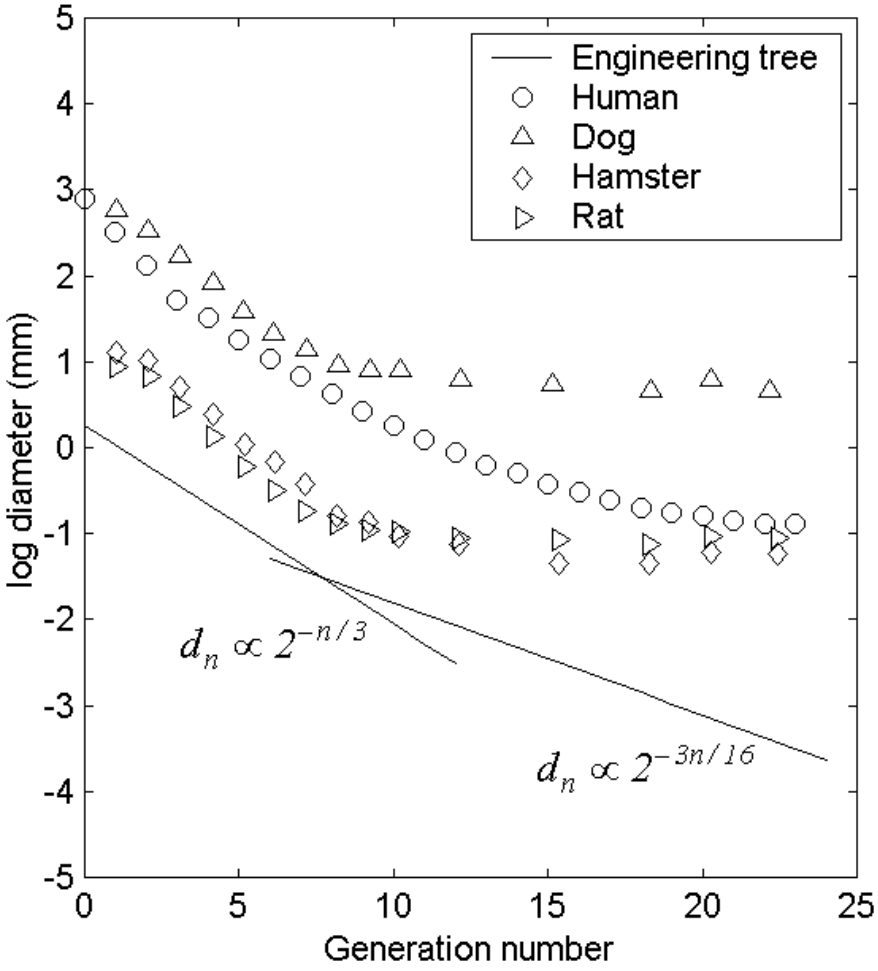

Length Distribution, Minimum Weight and Structural Stability

Minimizing total weight

$$W_T = \sum (W_T)_n$$

Constant total surface constraint

$$\sum (W_T)_n^{D_2/3} = const.$$

Structure stability requirement

$$l_n \propto W_n^{1/4}$$

Length Distribution for the Entire Tree

$$l_n \propto 2^{-n/4}$$

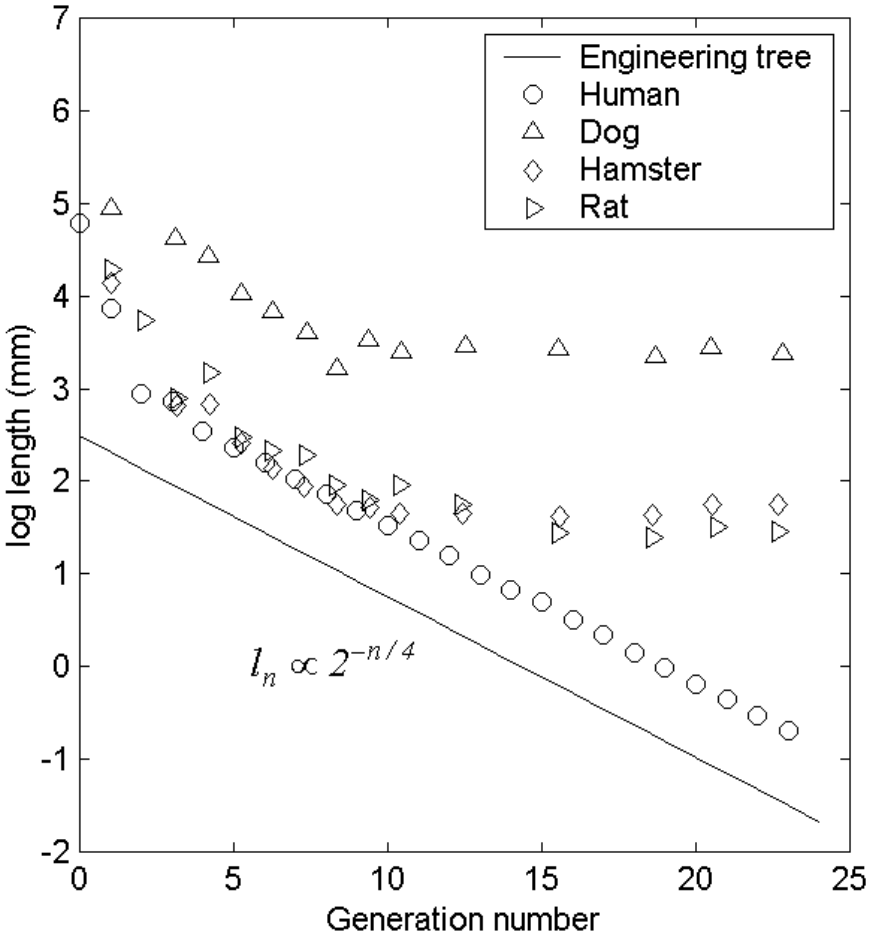

Conclusions

Diameter distribution in the diffusion zone:

$$d_n \propto 2^{-3n/16}$$

Length distribution:

$$l_n \propto 2^{-n/4}$$

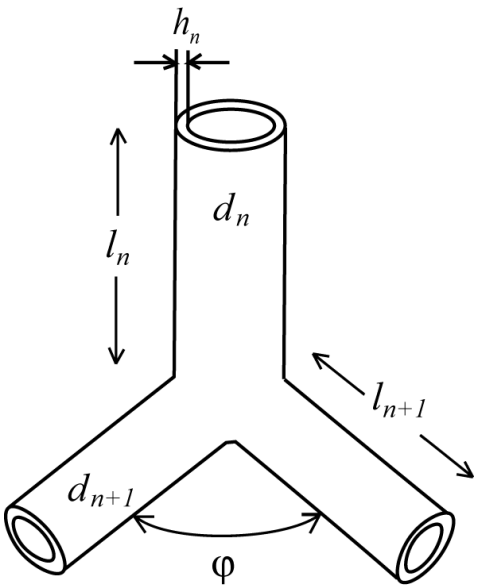

Bifurcation angle for min power & volume:

$$\varphi \approx 75^o$$

Bifurcation angle for min drag & surface:

$$\varphi \approx 102^o$$

Further Comments

- ***Tree is not on a plane.***
  Determining rotational angle distribution:
  a non-trivial geometry problem

- ***This work does not attempt to provide a teleological explanation for the physiology of bronchial trees.***